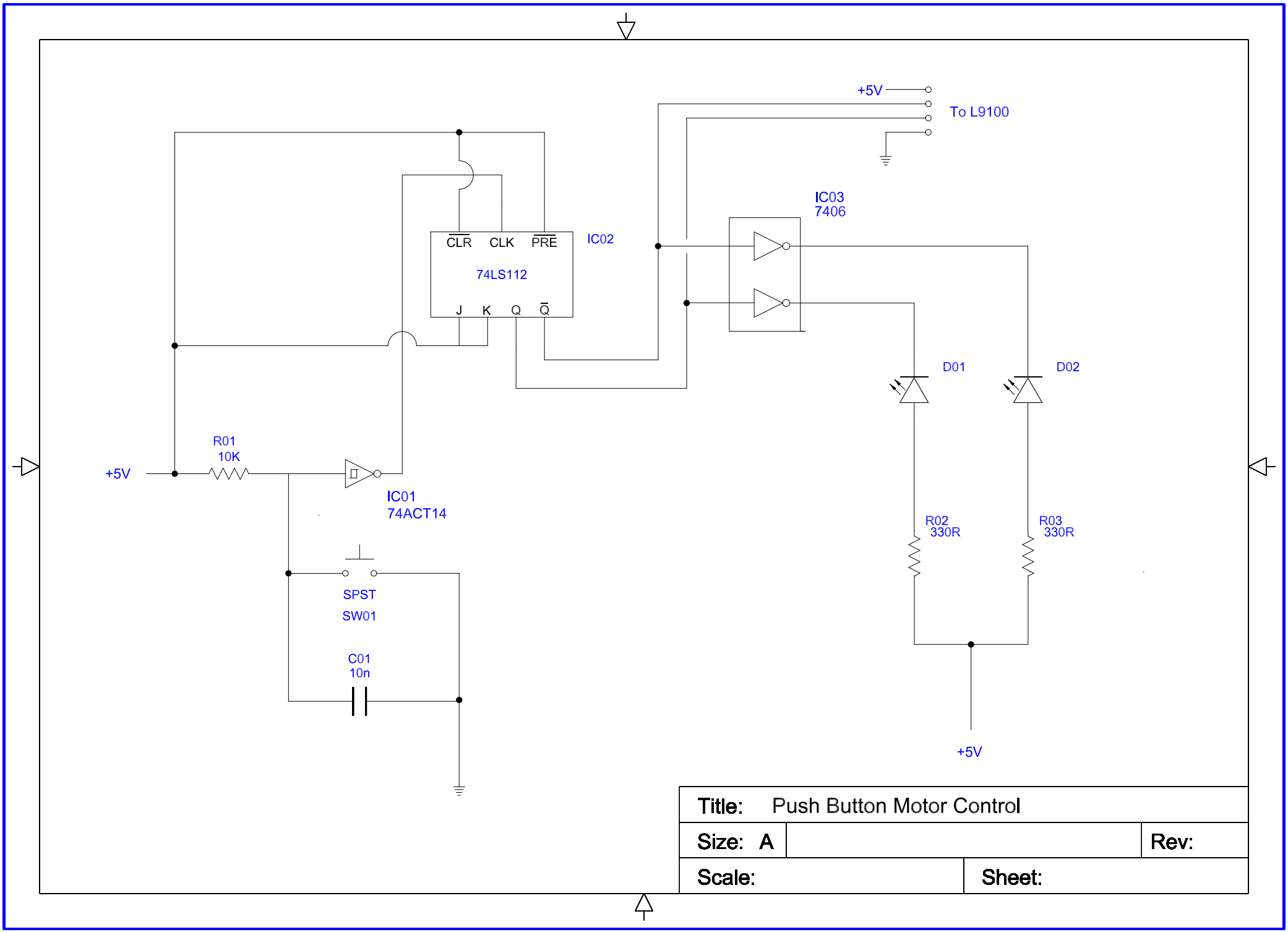
+5V
To L9100
IC03
7406
CLR
CLK
PRE
IC02
74LS112
J
K
Q
Q̄
D01
D02
R01
10K
+5V
IC01
74ACT14
R02
330R
R03
330R
SPST
SW01
C01
10n
+5V
Title: Push Button Motor Control
Size: A
Rev:
Scale:
Sheet: